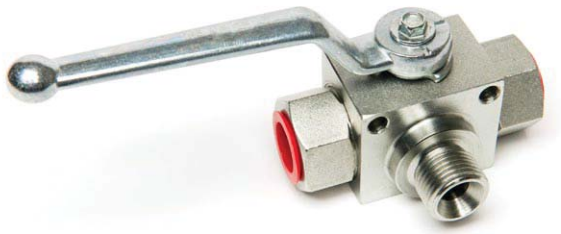

How To Order

BK3	M	G1/2	L	1	1	1	2
(1)	(2)	(3)	(4)	(5)	(6)	(7)	(8)

(1)	Model:	BK3 = Square body
(2)	Third way:	without "M" = Female thread with "M" = Male thread
(3)	Thread size:	e.g. G1/2
(4)	Porting pattern:	See chart of porting pattern
(5)	Block & connection material:	1 = Carbon steel 2 = Stainless steel 304
(6)	Ball & stem material:	1 = Carbon steel 2 = Stainless steel 304
(7)	Ball seat material:	1 = POM 4 = PTFE
(8)	Connection & stem seal:	2 = NBR 4 = FPM

PORTING PATTERN (SEE CHART)

Hydraulic oil just can flow into valve through port "1", and the valve only can be sealed under the two situations:
(1) Pressure at the closed port is zero:
(2) Pressure at the closed port is lower than at the two open ports.

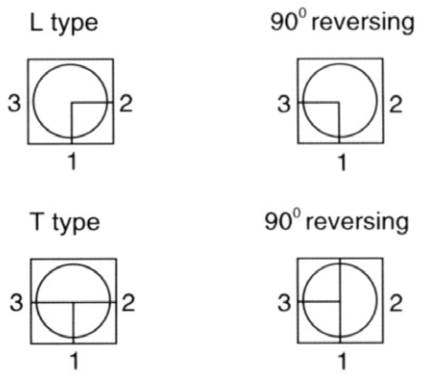

Dimensions

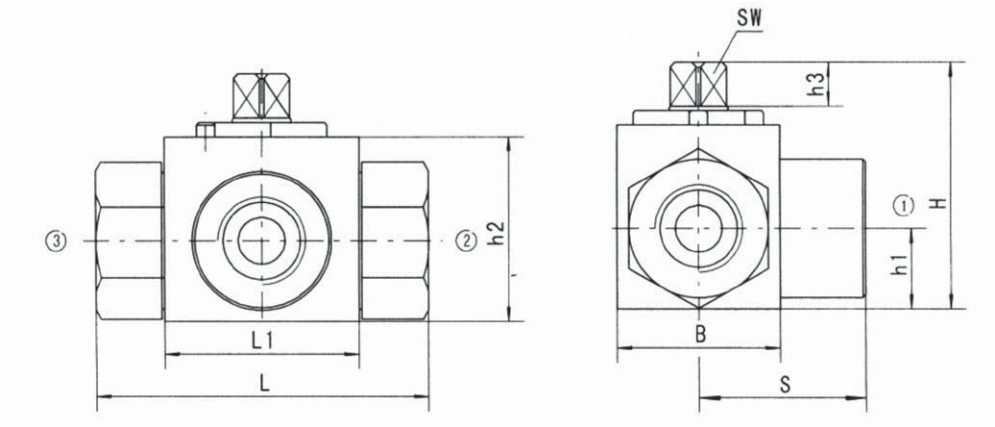

Order information

ISO 228 Female

Model	DN	PN	LW	d1	i	L	L1	B	H	h1	h2	h3	SW1	SW2
BK3-G1/8	4	315	6	G1/8	10	69	37	28	44,5	13	32	8	9	35
BK3-G1/4	6	315	6	G1/4	14	69	37	28	44,5	13	32	8	9	35
BK3-G3/8	10	315	10	G3/8	14	72	42	32	52,5	17	40	8	9	36
BK3-G1/2	13	315	13	G1/2	16	83	48	35	52,5	17	40	8	9	42
BK3-G3/4	20	315	20	G3/4	18	95	60	48	75	24	57	12	14	49
BK3-G1"	25	315	25	G1"	20,5	113	65	57	82	28,5	64	12	14	56,5
BK3-G1"1/4	25	315	25	G1"1/4	22	120	65	60	82	28,5	64	12	14	60

ANSI B1.20.1NPT Female

Model	DN	PN	LW	d1	i	L	L1	B	H	h1	h2	h3	SW1	SW2
BK3-1/8NPT	4	315	6	NPT1/8	10	69	37	28	44,5	13	32	8	9	35
BK3-1/4NPT	6	315	6	NPT1/4	14	69	37	28	44,5	13	32	8	9	35
BK3-3/8NPT	10	315	10	NPT3/8	14	72	42	32	52,5	17	40	8	9	36
BK3-1/2NPT	13	315	13	NPT1/2	16	83	48	35	52,5	17	40	8	9	42
BK3-3/4NPT	20	315	20	NPT3/4	18	95	60	48	75	24	57	12	14	49
BK3-1"NPT	25	315	25	NPT1"	20,5	113	65	57	82	28,5	64	12	14	56,5
BK3-1"1/4NPT	25	315	25	NPT1"1/4	22	120	65	60	82	28,5	64	12	14	60

Order information

DIN 2353 Light series

Model	DN	PN	LW		d1	i	L	L1	B	H	h1	h2	h3	SW1	SW2
BK3-06LR	4	315	4	6	M12x1,5	10	67	37	28	44,5	13	32	8	9	34,5
BK3-08LR	6	315	6	8	M14x1,5	10	67	37	28	44,5	13	32	8	9	34,5
BK3-10LR	8	315	8	10	M16x1,5	11	74	42	32	52,5	17	40	8	9	37
BK3-12LR	10	315	10	12	M18x1,5	11	74	42	32	52,5	17	40	8	9	37
BK3-15LR	13	315	13	15	M22x1,5	12	82	48	35	52,5	17	40	8	9	40
BK3-15LR	13	315	13	15	M22x1,5	12	82	47	38	63,5	19	46	11	12	40
BK3-18LR	13	315	13	18	M26x1,5	12	82	48	35	52,5	17	40	8	9	42
BK3-18LR	16	315	15	18	M26x1,5	12	82	47	38	63,5	19	46	11	12	42
BK3-22LR	20	315	19	22	M30x2	14	101	60	48	75	24	57	12	14	52
BK3-28LR	25	315	25	28	M36x2	14	108	65	57	82	28,5	64	12	14	54
BK3-35LR	25	315	25	35	M45x2	16	112	65	60	82	28,5	64	12	14	56

DIN 2353 Heavy series

Model	DN	PN	LW		d1	i	L	L1	B	H	h1	h2	h3	SW1	SW2
BK3-08SR	4	315	5	8	M16x1,5	12	73	37	28	44,5	13	32	8	9	37
BK3-10SR	6	315	6	10	M18x1,5	12	73	37	28	44,5	13	32	8	9	37
BK3-12SR	8	315	8	12	M20x1,5	14	76	42	32	52,5	17	40	8	9	38
BK3-14SR	10	315	10	14	M22x1,5	14	80	42	32	52,5	17	40	8	9	40
BK3-16SR	13	315	13	16	M24x1,5	14	86	48	35	52,5	17	40	8	9	43,5
BK3-16SR	13	315	13	16	M24x1,5	14	86	47	38	63,5	19	46	11	12	43,5
BK3-20SR	13	315	13	20	M30x2	16	90	48	35	52,5	17	40	8	9	45,5
BK3-20SR	16	315	15	20	M30x2	16	90	47	38	63,5	19	46	11	12	45,5
BK3-25SR	20	315	20	25	M36x2	18	109	60	48	75	24	57	12	14	56
BK3-30SR	25	315	25	30	M42x2	20	120	65	57	82	28,5	64	12	14	60
BK3-38SR	25	315	25	38	M52x2	22	124	65	60	82	28,5	64	12	14	62

Dimensions

3-way Ball Valves with Mounting Holes

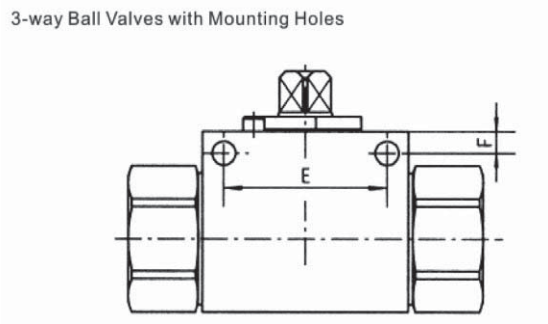

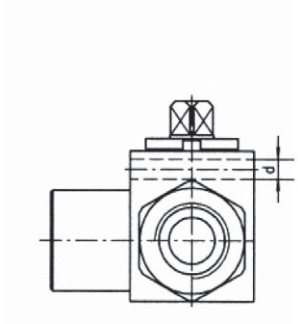

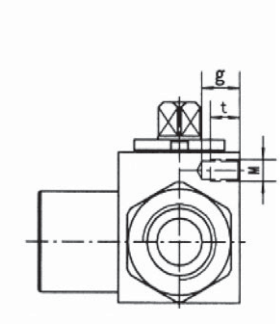

Full Holes Dimensions			
DN	E	F	d
4	26	5	4,5
6	26	5	4,5
10	32	5	6,5
13	37,5	4,8	6,5
16	37,5	5	6,5
20	45	6,5	6,5
25	55	6	6,7
25/32	55	6	6,7

Thread Holes Dimensions					
DN	E	F	d	g	M
4	24	6	6,5	9	M6
6	24	6	6,5	9	M6
10	32	5,5	7	10	M6
13	36	6	8,5	11	M6
16	32	8	7	10,5	M10
20	45	7,5	12	15	M10
25	45	7,5	12	15	M10
25/32	45	7,5	12	15	M10