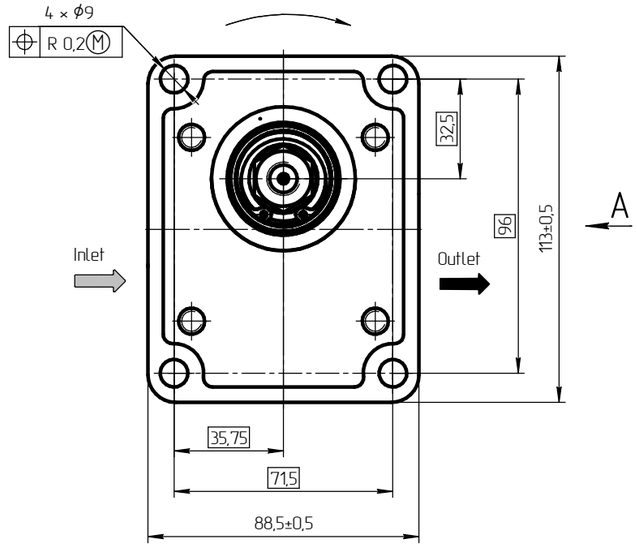

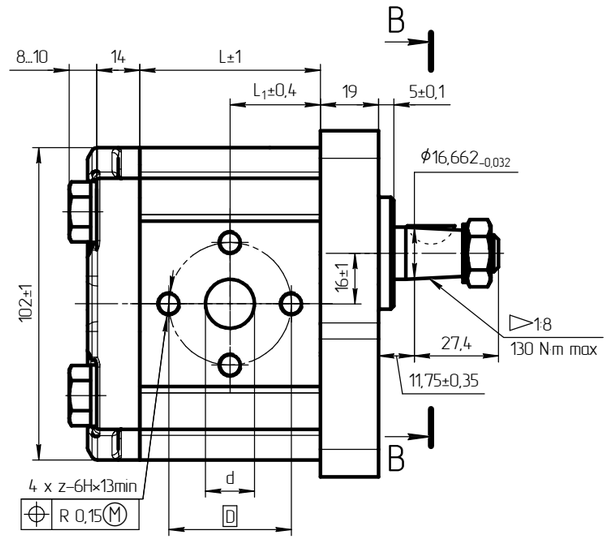

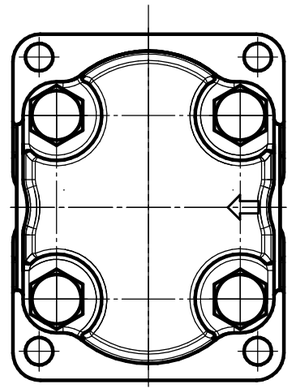

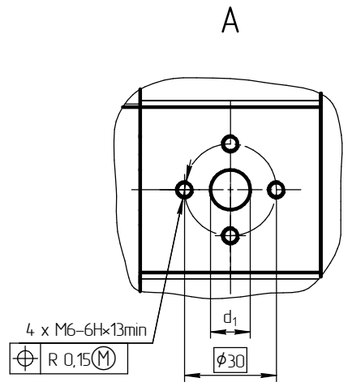

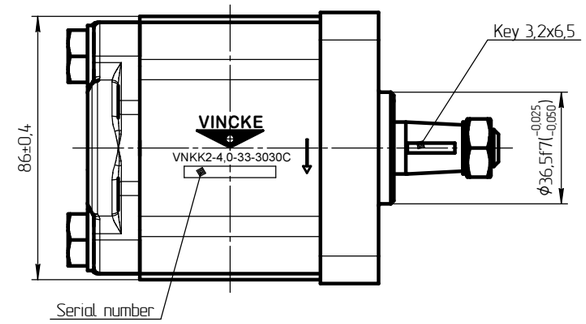

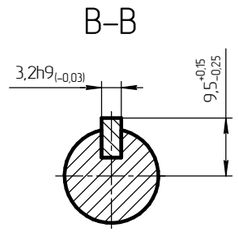

Pump Type	Theoretical displacement, cm^3/rev	Rotation when vieved on end of driveshaft	Dimensions						Maximum continuous pressure, P1, bar	Maximum speed at pressure P1, rpm	Minimum speed at pressure P1, rpm	Weight, kg	Cover and flange material	Operating temperature range
			L	L_1	d	d_1	D	z						
VNKK2-4,0-33-3030C	4,5	Clockwise	47,5	23,75	13	13	30	M6	280	4000	700	4,1	Cast iron	continuous 20°C to 80°C cold start -20°C max intermittent 100°C
VNKK2-6,3-33-3030C	6,3	Clockwise	50,2	25,1								4,3		
VNKK2-8,2-33-3030C	8,2	Clockwise	53,2	26,6						3500		4,4		
VNKK2-10-33-4030C	10,0	Clockwise	56,0	28,0	19	14	40	M8			600	4,5		
VNKK2-12,5-33-4030C	12,5	Clockwise	59,8	29,9								4,6		
VNKK2-14-33-4030C	14,0	Clockwise	62,1	31,05								4,7		
VNKK2-16-33-4030C	16,0	Clockwise	65,2	32,6								4,8		
VNKK2-19-33-4030C	19,0	Clockwise	69,9	34,95					250	3000	500	5,0		

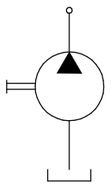

Gear Pumps

–
–
–